Hand Tracker and Pressure Plate for VRRT with dementia patients

Jacob Janowitz
Undergraduate, Faculty of Business and Information Technology
Ontario Tech University
Oshawa, Canada
jacob.janowitz@ontariotechu.net

Michael Atteh
Undergraduate, Faculty of Business and Information Technology
Ontario Tech University
Oshawa, Canada
subomi.atteh@ontariotechu.net

Introduction

Our capstone project focuses on using VR technology for dementia patients, by utilizing a smell diffuser along with a VR space to help dementia patients remember objects and scents from their past. Throughout our research, we discovered that a common issue amongst older adults and VR technology is they struggle to use the controllers. Many older adults have never used VR before, and because of this many need time to acclimate to this technology. The problem we aim to resolve is to give older adults a simpler input method for them to interact with the VR space. For this project, we have made a hand tracker for the user, along with a pressure plate to trigger the smell diffuser.

Materials and Methods

The Pressure plate is fully made from PLA plastic, and houses a Microbit on the inside for its electronics. The body is in three sections, the bottom holds the Microbit steady, the middle is a spring that provides stability for the plate and allows it to travel up and down. The top is the plate where objects are placed.

The Hand tracker is composed of two main components, the custom PCB(Printed Circuit Board), and the Case. The case is made of Plastic, specifically PLA(Polylactic Acid), designed using Fusion360 and made by method of 3D Printing. The PCB is made up of more components, specifically an ESP32 microcontroller, a power switch, an IMU(Inertial Motion Unit), a charging board, and a 3.7V battery. The PCB was designed using Kicad and developed and shipped by JLCPCB, then soldered with the help of the course Teaching Assistant and Classmates.

Results

The results for the pressure plate is when an object that weighs around 10 ounces is placed on the pressure plate, it is prepped to trigger the smell. When the object is lifted off, a signal is sent to trigger the smell. The minimum weight is 10 ounces, and the maximum weight is inconclusive on account of not wanting to potentially break the pressure plate. The spring component for this use case allows objects to safely be placed on top, and travel down and up safely (figure A). The initial design was wide, but was changed to be smaller and taller based on the size of the 3D printers at the lab, and to concentrate the weight of the object that sits on top better (figure B).

The Board uses the IMU to track rotation and acceleration, allowing for replication of arm position in the Unity Scene, which is replicated on a model in the scene. This made for a decent view of the motion tracking in action.

Takeaway and Recommendations

The first takeaway from this is the tracking accuracy is not the strongest, as over time, it develops drift, making the tracking look off over time. A recommendation to fix this is calibration every 30-45 minutes to keep tracking accurate.

The second takeaway is the size of the hand tracking modules. While light enough to sit on the hand, they can tend to be bulky and discomforting long term. A solution would be to use smaller components and create a sleeker or smaller design.

The takeaway for the pressure plate is to better reinforce the top plate in a future revision. Objects with a large diameter sit perfectly fine but when an object with a narrow diameter is placed, the plate can wobble and become unstable. A potential solution is to add legs on the top plate to give it more stability. The second takeaway would be to have a way to secure each part together. In its current use case it's not an issue, but the problem presents itself when transporting it. A solution would be to either have the pieces clip together or use magnets.

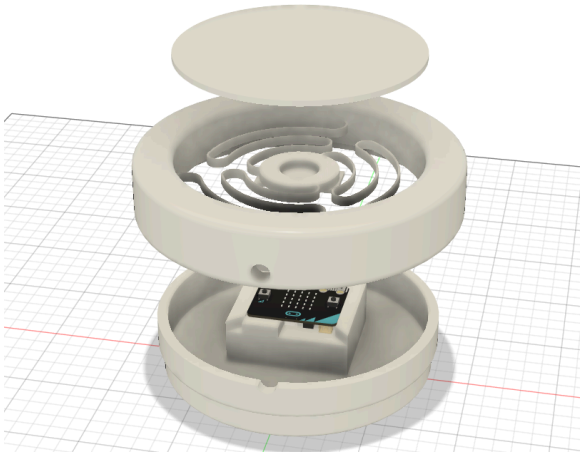

Figure A

Figure B

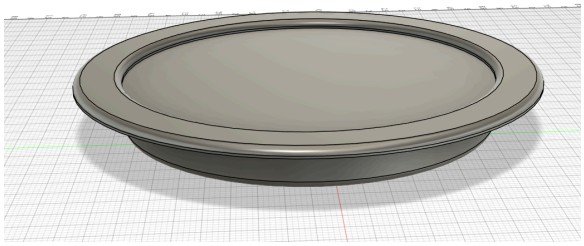

Figure C

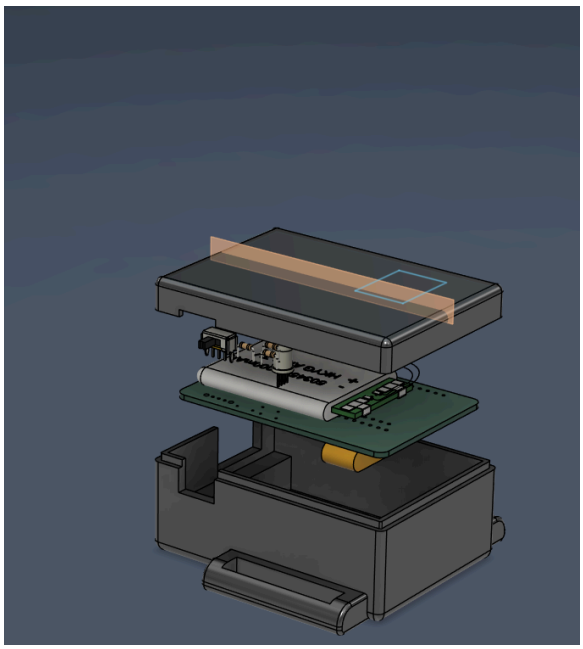

Figure D

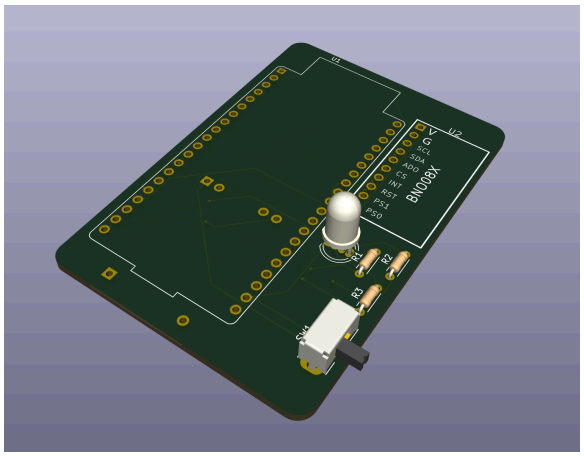
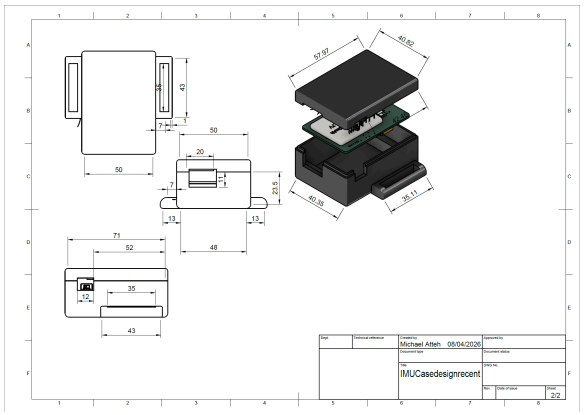
Figure E